Communication Protocol of NEUNET system
（Tentative version）

INCM-20210720-1942 Rev.A2
20th July, 2021

Ⅰ How to access NEUNET/GATENET from PC via LAN

In order to set NEUNET/GATENET from PC, or import data from NEUNET/GATENET to PC, it is necessary to communicate using two methods, TCP（Transmission Control Protocol） and UDP(User Datagram Protocol).

In NEUNET/GATENET, event data communication is performed by reliable TCP, and settings and status checks are performed using UDP, which is slightly less reliable but easy to use.
It is not possible to select either one, but it is necessary to use two types of communication methods properly.

Ⅱ Protocol

1 UDP

Via UDP, user can access register of NEUNET/ GATENET. The format of the UDP packet is as follows. This format is common to NEUNET and GATENET, command packet(PC→NEUNET/GATENET) and acknowledge packet(NEUNET/GATENET→PC).

(1) Address/Port No.

UDP/IP address＝192.168.0.16＋module No.、 port＝4660(0x1234)

※ This address/port is common for GATENET and NEUNET

(2) Contents of packet

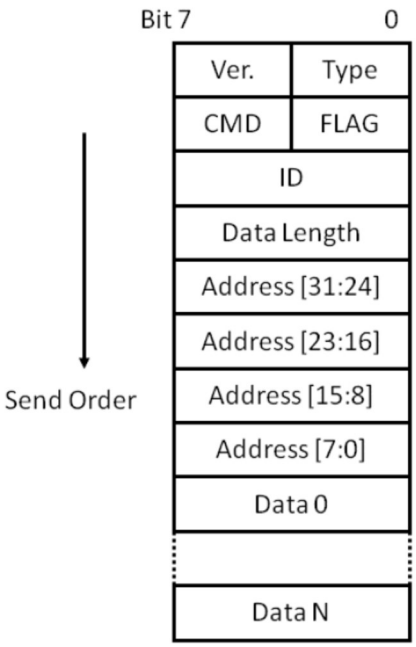

Data format of UDP packet

①Ver.

The packet version. Currently only 15 (0xF) is accepted.

Be sure to set it to 15. For other values, the packet is discarded.

②Type

The type of packet. Currently only 15 (0xF) is accepted.

Be sure to set it to 15. For other values, the packet is discarded.

③CMD

CMD indicates the type of access.

Currently the following two values can be used.

0xc: Read

0x8: Write

CMD bit	Name	Description
3	Access	Bus Access
2	R/W	0: Write, 1:Read
1	Reserve	Always 0
0	Reserve	Always 0

④FLAG

It indicates the packet type and execution result. Be sure to set bit3 = 0 in the command packet(PC→NEUNET/GATENET). When a bus error occurs, an acknowledge packet(NEUNET/GATENET→PC) with bit0 set to 1 is returned.

FLAG bit	Name	Description
3	REQ/ACK	0: Request, 1: Acknowledge
2	Reserve	Always 0
1	Reserve	Always 0
0	Error	0: Normal, 1: Bus Error

⑤ID

It is packet ID. It is used for checking execution.

The acknowledge packet(NEUNET/GATENET→PC) has the same ID as the corresponding command packet(PC→NEUNET/GATENET).

This value can be set to any value.

By changing this ID each time, it becomes possible to determine which command packet corresponds to the acknowledge packet.

⑥DATA LENGTH

For command packets:

Set the data length to read / write in bytes. If you set 0, it will not work, so set a length other than 0.

For acknowledge packet:

The data length that was executed normally. The count of data executed normally when interrupted due to an error is stored. When an error occurs, you can know at which address the error occurred from this value. Since it is an 8-bit length field, the byte length that can be accessed at one time is limited to 255 bytes. When accessing more than 255 bytes, divide it into multiple floors so that the data length of one access is 255 or less.

⑦ADDRESS

The address of the system registers of NEUNET/GATENET to access. The system register is accessed starting from the address stored in this field.

⑧DATA

For command packets:

For writhing :

In these areas, you must store the byte length data corresponding to the ”Data length”. If you send less data than the value of the Data length field, the data remaining in the internal memory will be written, so the value to be written will be undefined.

For reading:

Do not use this field.

For acknowledge packet:

For writhing :

The data you tried to write to the register is returned.

It is not the value read from the register.

For example, if you write to read-only memory, you cannot write, but the written data is stored in this field.

For reading:

The read data is stored.

(3) System resister

① Register map of NEUNET

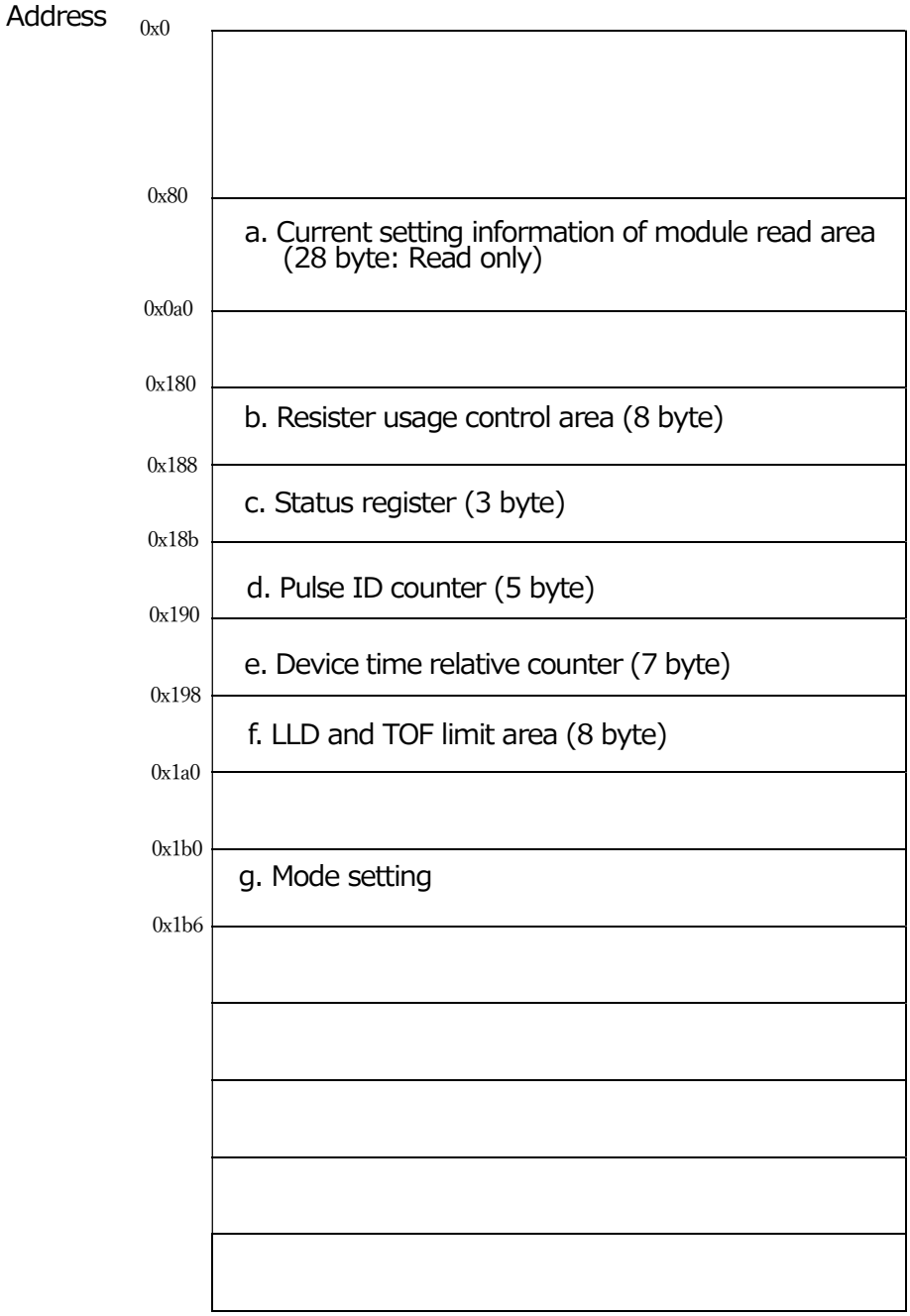

a. Current setting information of module read area (read only)

UDP Local address: 0x80 ~ 0x9b (128 ~ 159)

Address	+0	+1	+2	+3	+4	+5	+6	+7
0x80	MAC_address(47:0)							
0x88	(system area)							
0x90								
0x98					FE(7:0)		EV(22:0)	

A1

MAC_address:

MAC address

FE:

Event FIFO overflow count

EV:

Number of event FIFO data saved (16-bit unit)

b. Register usage control area

UDP Local_address: 0x180～0x187 (384 ~ 391)

A1

	+0	+1	+2	+3	+4	+5	+6	+7
0x180	(system area)							RR(7:0)

RR: RR(7) must be set to 0(read event memory mode)

c. Status register

※This resister is effective when using only one NEUNET without using GATENET

UDP Local_address: 0x188 ~ 0x18a (392 ~ 394)

	+0	+1	+2
0x188	ST(15:0)		C(7:0)

ST: (7)=1>> start time clock　0>> stop time clock

(6)=1>>FIFO buffer clear

C(6:0)=crate No.

C(7)=1/0=32/30bit(Device time)

d. Pulse ID counter

※This resister is effective when using only one NEUNET without using GATENET

UDP Local_address: 0x18b ~ 0x18f (395 ~ 399)

	+0	+1	+2	+3	+4
0x18b	K(39:0)				

K(39:0)=pulse No.

e. Device time counter

※This resister is effective if there is no T0 signal(pull-up state) and using only one NEUNET.

UDP Local_address: 0x190 ~ 0x196 (400 ~ 406)

A1

(i)30bit mode : register 0x18a C(7)=0

	+0	+1	+2	+3	+4	+5	+6
0x190	S(29:0)				SS(7:0)	(no use 18bit)	

S(29:0)= time since 1/1 2008 0:00; unit=second

SS(7:0)=subseconds; unit=1/256(2^8) second

(ii)32bit mode : register 0x18a C(7)=1

	+0	+1	+2	+3	+4	+5	+6
0x190	S(31:0)				SS(7:0)	(no use 16bit)	

S(31:0)= time since 1/1 2008 0:00; unit=second

SS(14:0)=subseconds; unit=1/256(2^8) second

f. LLD and Limit of TOF

UDP Local_address: 0x198 ~ 0x19f (408 ~ 415)

	+0	+1	+2	+3	+4	+5	+6	+7
0x198	0	LLD(11:0)	TMH(23:0)			TML(23:0)		

LLD(11:0) = Low level discriminator of pulse height; unit=ch

TMH(23:0)=Upper limit of TOF; unit=25ns

TML(23:0)=Lower limit of TOF; unit=25ns

g. Mode setting

UDP Local_address: 0x1b0 ~ 0x1b5 (432 ~ 437)

A2

	+0	+1	+2	+3	+4	+5
0x1b0	(system area)					Gate(7:0)

Gate(7:0)= function change(2)

Gate(7)=event data transfer mode 1>>one way, 0>>hand shake

default =0

※"One way mode" is recommended because maximum data transfer rate is larger. In "hand shake mode", data transfer rate is about 60% compared to that of one way mode.

Gate(6)=T0 sync event 1>>T0 sync, 0>>no sync default=0

② Register map of GATENET

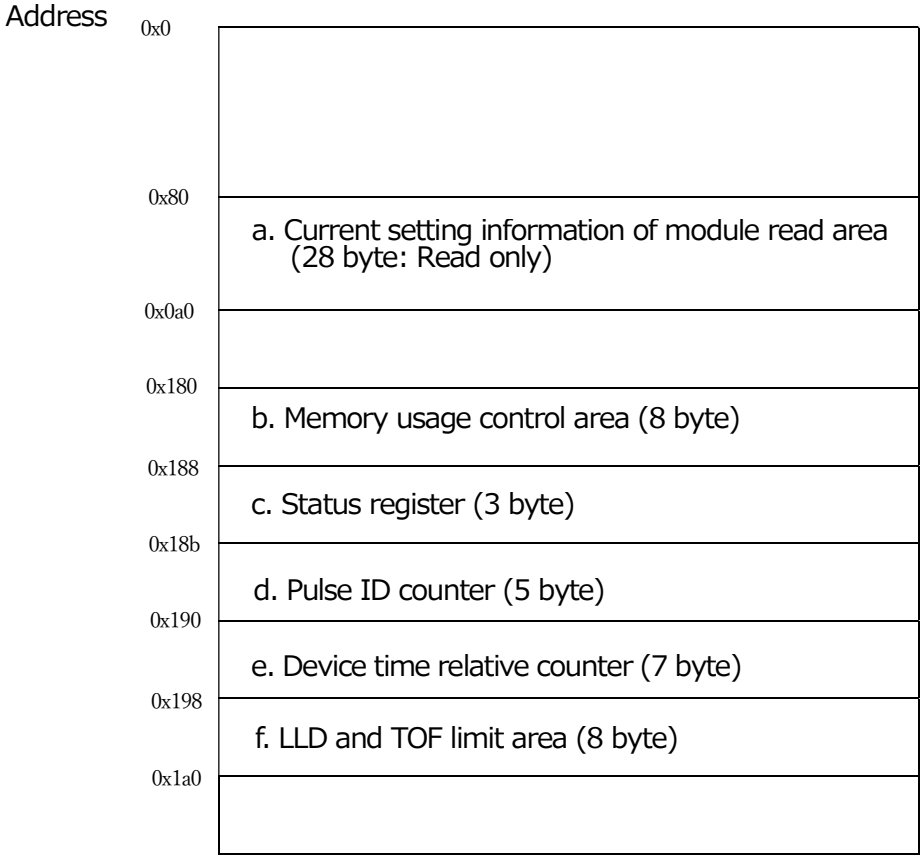

a. Current setting information of module read area (read only)

Same as NEUNET.

b. Register usage control area

Same as NEUNET.

c. Status register

UDP Local_address: 0x188 ~ 0x18a (392 ~ 394)

	+0	+1	+2
0x188	ST(15:0)		C(7:0)

ST: (7)=1>> start time clock 0>> stop time clock

(6)=1>>FIFO buffer clear

A1

C(7:0)=crate No.(0~127)

d. Pulse ID counter

Same as NEUNET.

e. Device time counter

UDP Local_address: 0x190 ~ 0x196 (400 ~ 406)

	+0	+1	+2	+3	+4	+5	+6
0x190	S(29:0)				SS(14:0)		(no use 11bit)

A1

S(29:0)= time since 1/1 2008 0:00; unit=second

SS(14:0)=subseconds; unit=1/32768(2^{15}) second

※Only 30bit-mode is available on GATENET.

f. LLD and Limit of TOF

Same as NEUNET.

2 TCP

(1) Address/Port No.

TCP/IP address＝192.168.0.16＋module No.、 port＝23(0x17)

※ This address/port is common for GATENET and NEUNET

(2) DAQ(PC) → NEUNET

a. Requesting event data(8byte)

0xa3				LN(31:0)

LN(31:0)=maximum size of transfer data; unit=16bits(2 bytes)

※This command required only in “handshake mode”.
This command is not required in “one way mode”.

(3) NEUNET → DAQ(PC)

a. Number of event data(4byte)

L(31:0)

L(31:0)= size of data ; unit=16bits

※In handshake mode, NEUNET return “Number of event data” first. Event data, described below , follows. In one way mode, NEUNET doesn’t return “Number of event data”

b. Event data

① neutron data(8byte)

0x5a	T(23:0)	P(7:0)	PL(11:0)	PR(11:0)

T(23:0)= detection time after trigger pulse(TOF); unit=25ns
P(2:0)= detector(PSD) number(0~7)
P(7:3)= (not use)
PL(11:0)=left pulse height
PR(11:0)=right pulse height
※Position of neutron detection can be calculated by PL and PL.

①’ neutron data(high position resolution system: ADC 14bit type) (8byte)

0x5f	T(23:0)	P(3:0)	PL(13:0)	PR(13:0)

T(23:0)= detection time after trigger pulse(TOF); unit=25ns
P(2:0)= detector(PSD) number(P(3) is not used)

PL(13:0)=left pulse height
PR(13:0)=right pulse height

② trigger ID(8byte)

0x5b	C(7:0)	M(7:0)	K(39:0)

C(7:0)= crate number
M(11:0)=module number
K(39:0)=ID number of trigger signal

※ID number is No. of T0, which is same as the value from GATENET.

②' trigger ID(T0 sync mode)(8byte)

0x51	C(7:0)	M(7:0)	K(39:0)

※Content of data is same as that of ②
※In case of NEUNET register of Gate(6)=1(address 0x1b5), trigger ID data(header=0x51) is sent just after T0 signal rises. On the other hand, in case of Gate(6)=0, trigger ID data (header=0x5b)is sent after instrument time data, about 300μs after T0 signal rises.

③ instrument time(8byte)

0x5c	S(29:0)	SS(14:0)	US(10:0)

S(29:0)= time since 1/1 2008 0:00; unit=second
SS(14:0)=subseconds; unit=32768(2^{15})Hz
US(10:0)=module clock; unit=25ns

③' instrument time（32bit mode）(8byte)

0x6c	S(31:0)	SS(14:0)	US(8:0)

S(31:0)= time since 1/1 2008 0:00; unit=second
SS(14:0)=subseconds; unit=32768(2^{15})Hz
US(8:0)=module clock; unit=100ns
※In case of NEUNET register of C(7)=1(address 0x18a), instrument time is expressed by 32bit digit. On the other hand, in case of C(6)=0, instrument time is expressed by 30bit digit.

③”instrument time（Self-oscillation mode）(8byte)

0x5c	S(29:0)	SS(7:0)	US(17:0)

S(29:0)= time since 1/1 2008 0:00;　unit=second

SS(7:0)=subseconds;　unit=1/256 second

US(17:0)=module clock;　unit=100 ns

※If there is no T0 signal connected(pull-up state) , this mode is set automatically.

③’”instrument time（32bit mode and Self-oscillation mode）(8byte)

0x6c	S(31:0)	SS(7:0)	US(15:0)

S(29:0)= time since 1/1 2008 0:00;　unit=second

SS(7:0)=subseconds;　unit=1/256 second

US(17:0)=module clock;　unit=100 ns

※If there is no T0 signal connected (pull-up state) , this mode is set automatically.

※In case of NEUNET register of C(7)=1(address 0x18a), instrument time is expressed by 32bit digit. On the other hand, in case of C(6)=0, instrument time is expressed by 30bit digit.

※example of event data from NEUNET

No	Data 0	1	2	3	4	5	6	7	Explanation
1	5A	00	0A	FA	02	2B	99	E3	neutron data TOF = 0.00007025[s](2810)
2	5A	00	0C	E9	03	17	E5	79	neutron data TOF = 0.000082625[s](3305)
3	5A	00	0D	7A	00	36	88	09	neutron data TOF = 0.00008625[s](3450)
4	5A	00	0E	FB	03	16	43	05	neutron data TOF = 0.000095875[s](3835)
5	5A	00	22	21	03	04	80	BE	neutron data TOF = 0.000218425[s](8737)
6	5B	00	00	00	00	1B	4C	FC	trigger-ID crate No. = 0 module No. = 0
7	5C	57	91	E5	90	5D	F5	A7	instrument time time = 367294820.091736
8	5A	00	2A	05	01	03	C0	92	neutron data TOF = 0.000268925[s](10757)
9	5A	00	50	4F	04	0B	34	0E	neutron data TOF = 0.000513975[s](20559) detector No PH(R) = 1038
10	5A	00	53	B2	05	16	D8	24	neutron data TOF = 0.00053565[s](21426) detector No PH(R) = 2084
11	5A	00	5D	CF	06	05	C2	0C	neutron data TOF = 0.000600375[s](24015) detector 92 PH(R) = 524
12	5A	00	66	CE	04	11	66	63	neutron data TOF = 0.00065795[s](26318) detector 278 PH(R) = 1635
13	5A	00	6D	1E	03	1A	09	8D	neutron data TOF = 0.00069835[s](27934) detecto L) = 416 PH(R) = 2445
14	5A	00	78	EE	05	17	C8	C4	neutron data TOF = 0.00077395[s](30958) detect H(L) = 380 PH(R) = 2244
15	5A	00	7C	86	05	18	18	AE	neutron data TOF = 0.00079695[s](31878) detec PH(L) = 385 PH(R) = 2222
16	5A	00	88	13	00	0D	14	B1	neutron data TOF = 0.000870875[s](34835) de = 0 PH(L) = 209 PH(R) = 1201
17	5A	00	9A	0C	06	1B	B9	BF	neutron data TOF = 0.0009859[s](39436) det = 6 PH(L) = 443 PH(R) = 2495
18	5A	00	9F	31	06	15	57	6A	neutron data TOF = 0.001018825[s](40753) r No. = 6 PH(L) = 341 PH(R) = 1898
19	5A	00	09	0A	03	27	F7	9C	neutron data TOF = 0.00005785[s](2314) or No. = 3 PH(L) = 639 PH(R) = 1948
20	5A	00	0B	A5	02	02	30	8A	neutron data TOF = 0.000074525[s](2981) tector No. = 2 PH(L) = 35 PH(R) = 138
21	5A	00	0C	D4	00	0C	84	40	neutron data TOF = 0.0000821[s](3284) etector No. = 0 PH(L) = 200 PH(R) = 1088
22	5A	00	0D	76	01	22	57	3C	neutron data TOF = 0.00008615[s](3446) detector No. = 1 PH(L) = 549 PH(R) = 1852
23	5B	00	00	00	00	1B	4C	FD	trigger-ID crate No. = 0 module No. = 0 ID = 1789181
24	5C	57	91	E5	90	68	D6	75	instrument time time = 367294820.102356[s] sysclock 0.000041325[s]
25	5A	00	2E	E6	00	32	51	ED	neutron data TOF = 0.00030015[s](12006) detector No. = 0 PH(L) = 805 PH(R) = 493
26	5A	00	40	C4	07	3C	A2	E3	neutron data TOF = 0.0004145[s](16580) detector No. = 7 PH(L) = 970 PH(R) = 739
27	5A	00	4E	6F	04	0E	55	3F	neutron data TOF = 0.000501975[s](20079) detector No. = 4 PH(L) = 229 PH(R) = 1343
28	5A	00	52	D6	02	13	97	37	neutron data TOF = 0.00053015[s](21206) detector No. = 2 PH(L) = 313 PH(R) = 1847
29	5A	00	53	27	01	17	58	75	neutron data TOF = 0.000532175[s](21287) detector No. = 1 PH(L) = 373 PH(R) = 2165
30	5A	00	5E	DE	06	06	E2	82	neutron data TOF = 0.00060715[s](24286) detector No. = 6 PH(L) = 110 PH(R) = 642
31	5A	00	5F	4E	01	07	F2	E4	neutron data TOF = 0.00060995[s](24398) detector No. = 1 PH(L) = 127 PH(R) = 740
32	5A	00	96	58	00	12	96	C4	neutron data TOF = 0.0009622[s](38488) detector No. = 0 PH(L) = 297 PH(R) = 1732
33	5A	00	09	49	02	02	D0	72	neutron data TOF = 0.000059425[s](2377) detector No. = 2 PH(L) = 45 PH(R) = 114
34	5A	00	0A	CE	01	0A	5	E2	neutron data TOF = 0.00006915[s](2766) detector No. = 1 PH(L) = 165 PH(R) = 738
35	5A	00	0C	A6	00	17		82	neutron data TOF = 0.00008095[s](3238) detector No. = 0 PH(L) = 379 PH(R) = 1410
36	5A	00	0C	B6	06	85		08	neutron data TOF = 0.00008135[s](3254) detector No. = 6 PH(L) = 2140 PH(R) = 776
37	5A	00	0E	97	05	23		BA	neutron data TOF = 0.000093375[s](3735) detector No. = 5 PH(L) = 574 PH(R) = 2490
38	5A	00	1A	68	00	0		2E	neutron data TOF = 0.000169[s](6760) detector No. = 0 PH(L) = 226 PH(R) = 1326
39	5A	00	1A	E0	06			71	neutron data TOF = 0.000172[s](6880) detector No. = 6 PH(L) = 114 PH(R) = 625
40	5A	00	1D	A5	05		4	20	neutron data TOF = 0.000189725[s](7589) detector No. = 5 PH(L) = 1805 PH(R) = 1056
41	5B	00	00	00	00		C	FE	trigger-ID crate No. = 0 module No. = 0 ID = 1789182
42	5C	57	91	E5	9		9	A0	instrument time time = 367294820.11142[s] sysclock 0.0000104[s]
43	5A	00	36	E0			3	1A	neutron data TOF = 0.0003512[s](14048) detector No. = 0 PH(L) = 2259 PH(R) = 794
44	5A	00	50	E6			2	C4	neutron data TOF = 0.00051775[s](20710) detector No. = 4 PH(L) = 120 PH(R) = 708
45	5A	00	65	E			7	3E	neutron data TOF = 0.000652325[s](26093) detector No. = 0 PH(L) = 320 PH(R) = 1854
46	5A	00	8A				2	8C	neutron data TOF = 0.0008848[s](35392) detector No. = 0 PH(L) = 2553 PH(R) = 652
47	5A	01	3C				50	7C	neutron data TOF = 0.002028375[s](81135) detector No. = 7 PH(L) = 21 PH(R) = 124
48	5A								OF = 0.000073525[s](2941) detector No. = 0 PH(L) = 67 PH(R) = 133
49	5A								F = 0.00007565[s](3026) detector No. = 7 PH(L) = 474 PH(R) = 2585
50	5A								F = 0.000084175[s](3367) detector No. = 7 PH(L) = 120 PH(R) = 38
51	5A								F = 0.00008735[s](3494) detector No. = 0 PH(L) = 242 PH(R) = 952
52	5A								F = 0.00011125[s](4450) detector No. = 7 PH(L) = 77 PH(R) = 100
53	5A								F = 0.00018035[s](7214) detector No. = 3 PH(L) = 41 PH(R) = 110
54	5A	00	1C	3B	06	2F	21	B7	neutron data TOF = 0.000180675[s](7227) detector No. = 6 PH(L) = 754 PH(R) = 439
55	5B	00	00	00	00	1B	4C	FF	trigger-ID crate No. = 0 module No. = 0 ID = 1789185
56	5C	57	91	E5	90	7C	FA	63	instrument time time = 367294820.12204[s] sysclock 0.000015275[s]
57	5A	00	49	4D	05	0A	23	99	neutron data TOF = 0.000469125[s](18765) detector No. = 5 PH(L) = 162 PH(R) = 921
58	5A	00	52	AA	04	12	05	E9	neutron data TOF = 0.00052905[s](21162) detector No. = 4 PH(L) = 288 PH(R) = 1513
59	5A	00	56	E3	00	11	36	2F	neutron data TOF = 0.000556075[s](22243) detector No. = 0 PH(L) = 275 PH(R) = 1583

Bit 6 of the NEUNET gate register (address 0x1b5) changes the position and header of the trigger ID information.
In the case of bit 6=1, the header is 0x51 and is sent immediately after the T0 signal rises.

1 frame of data
1frame= 1cycle of trigger signal

(4) DAQ(PC) → GATENET

a. Requesting event data(8byte)

0xa3				LN(31:0)

LN(31:0)=maximum size of transfer data; unit=16bits(2 bytes)

※Only "handshake mode" is available on GATENET.

So "Requesting event data" command is needed to be sent to GATENET when PC need data from GATENET.

(5) GATENET → DAQ(PC)

a. Number of event data(4byte)

L(31:0)

L(31:0)= size of data ; unit=16bits

※GATENET return "Number of event data" first. Event data, described below , follows.

b. Event data

① neutron data(8byte)

0x5a	T(23:0)	P(7:0)		PL(1:0)	PR(11:0)

T(23:0)= detection time after trigger pulse(TOF); unit=25ns

P(7:0)= detector(PSD) number

PL(1:0)=lower 2bits of pulse height

PR(11:0)=upper 12bits of pulse height

② trigger ID(8byte)

0x5b	C(7:0)	M(7:0)	K(39:0)

C(7:0)= crate number

M(11:0)=module number

K(39:0)=ID number of trigger signal

③ instrument time(8byte)

0x5c	S(29:0)	SS(14:0)	US(10:0)

S(29:0)= time since 1/1 2008 0:00; unit=second

SS(14:0)=subseconds; unit=32768(2^{15})Hz

US(10:0)=module clock; unit=25ns

4. Appendix: Description of terms:

(1)Module No.

Module No. is the NEUNET/GATENET number.
Usually, one NEUNET is applied the PSD module(See picture below) that includes 8 PSDs and pre-amps.

Module No. is determined by the rotary switch settings on the NEUNET board. (See picture below)

In GATENET, Module No. is also determined by the rotary switch settings on the GATENET board. (See picture right)

Based on this number, the IP address is also determined.(192.168.0.16+Module No.)
Do not set the same number on multiple NEUNETs and GATENET.

(2)Crate No.

The Crate Number is a number assigned to GATENET.
This number is set in the register (address 0x18a) of the GATENET module via UDP.

When using multiple GATENETs, it is possible to set the same number, but giving each GATENET a different number is recommended.
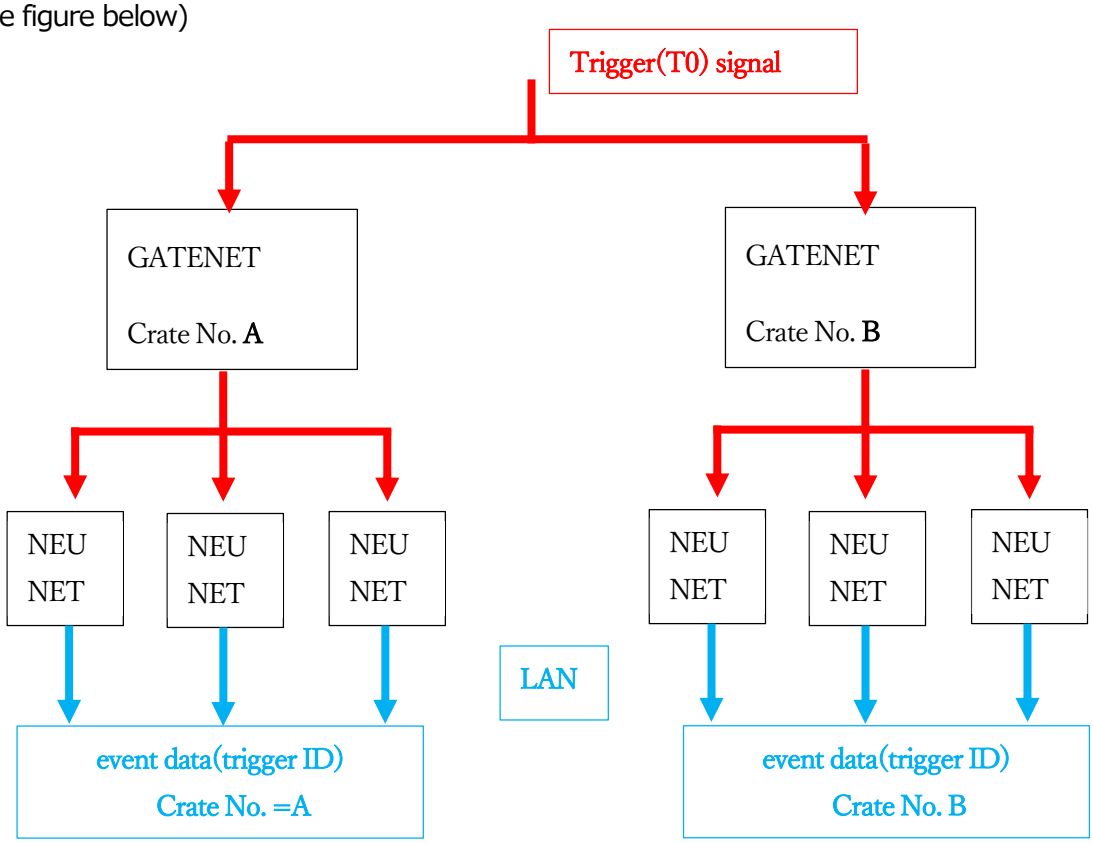
The crate number included in the trigger ID data (header=0x51 or 0x5b) sent by NEUNET is equal to the crate number of GATENET from which NEUNET receives the T0 signal is received.
(See figure below)